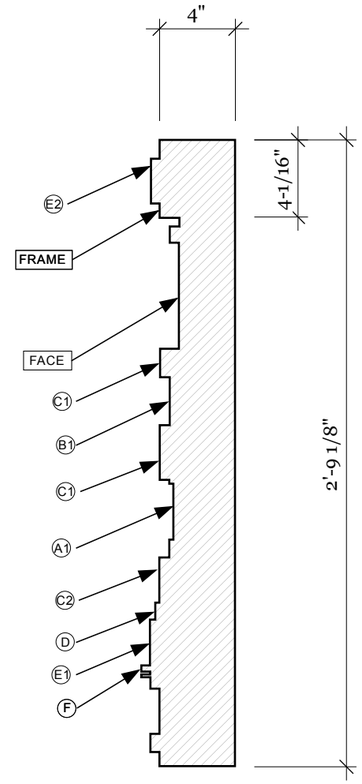

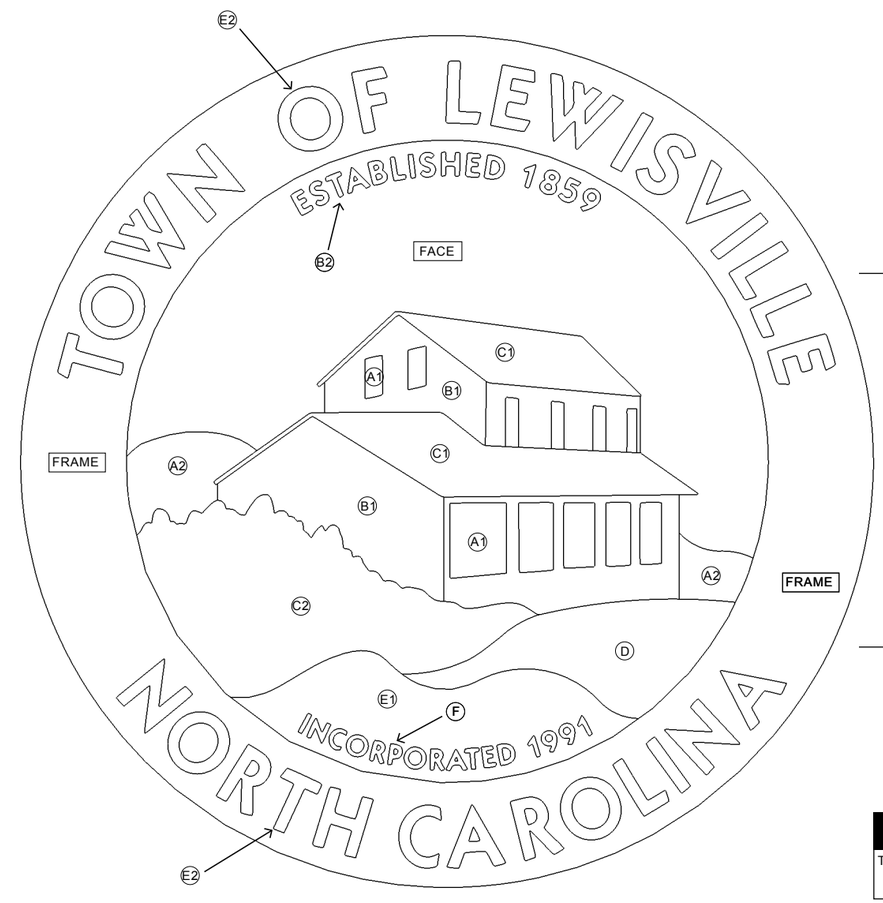

SEGMENT	RELIEF HEIGHT FROM FACE	COLOR (PAGE #)
FACE	0.0 INCHES	37925 (58)
FRAME	1 INCH	17038 (15)
A1	0.25 INCHES	17038 (15)
A2	0.25 INCHES	36495 (58)
B1	0.5 INCHES	37925 (58)
B2	0.5 INCHES	17038 (15)
C1	1 INCH	17038 (15)
C2	1 INCH	26270 (34)
D	1.25 INCHES	36173 (58)
E1	1.5 INCHES	36081 (59)
E2	1.5 INCHES	37925 (58)
F	2 INCHES	37925 (58)
NOTE: COLORS FEDERAL STANDARD 595B		

NCDOT
ROADSIDE ENVIRONMENTAL UNIT
1557 Mail Service Center
Raleigh, NC 27699-1557

Designer
Jeff Lackey
jefflackey@ncdot.gov
919-707-2937

3D Model
Miguel Santiago
msantiago@ncodt.gov
919-707-2955

PROJECT
Division 9
Town of Lewisville
Bridge Medallion

PROGRESS DRAWING

This drawing is not intended to be used for contract pricing or fabrication purposes. All content is subject to change

DRAWN BY
JL | MS

ISSUE
06/18/2015

RE-ISSUE
05/17/2016

A0.1

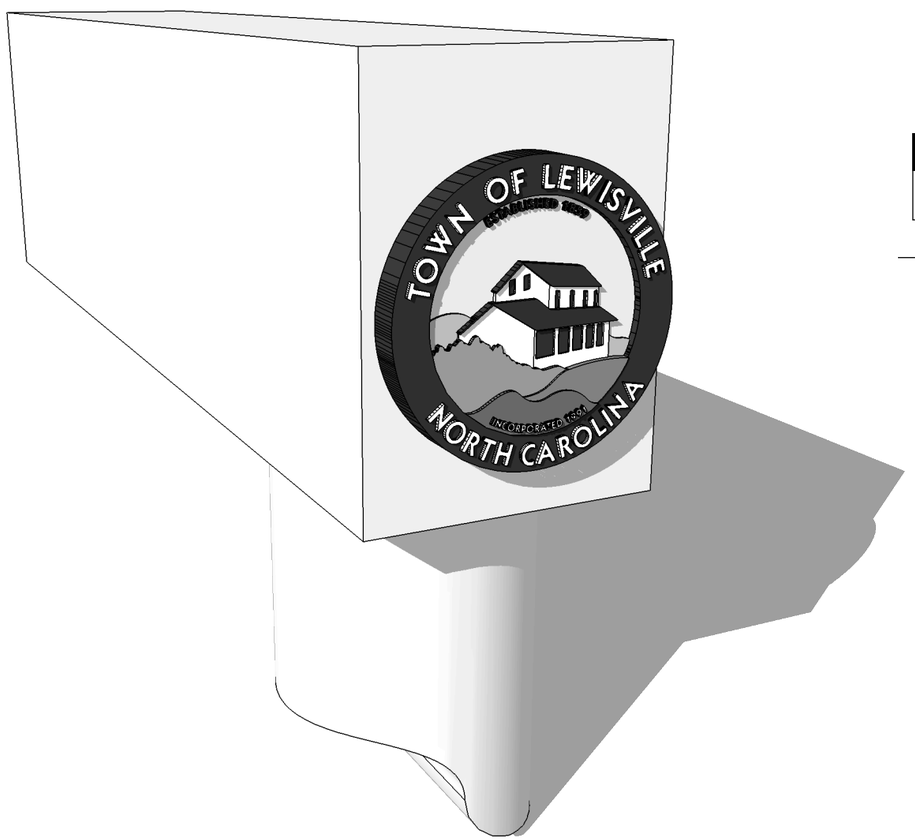

NCDOT
ROADSIDE ENVIRONMENTAL UNIT
1557 Mail Service Center
Raleigh, NC 27699-1557

Designer
Jeff Lackey
jefflackey@ncdot.gov
919-707-2937

3D Model
Miguel Santiago
msantiago@ncodt.gov
919-707-2955

PROJECT
Division 9
Town of Lewisville
Bridge Medallion

PROGRESS DRAWING

This drawing is not intended to be used for contract pricing or fabrication purposes. All content is subject to change

DRAWN BY
JL | MS

ISSUE
06/18/2015

RE-ISSUE
05/17/2016

A0.2

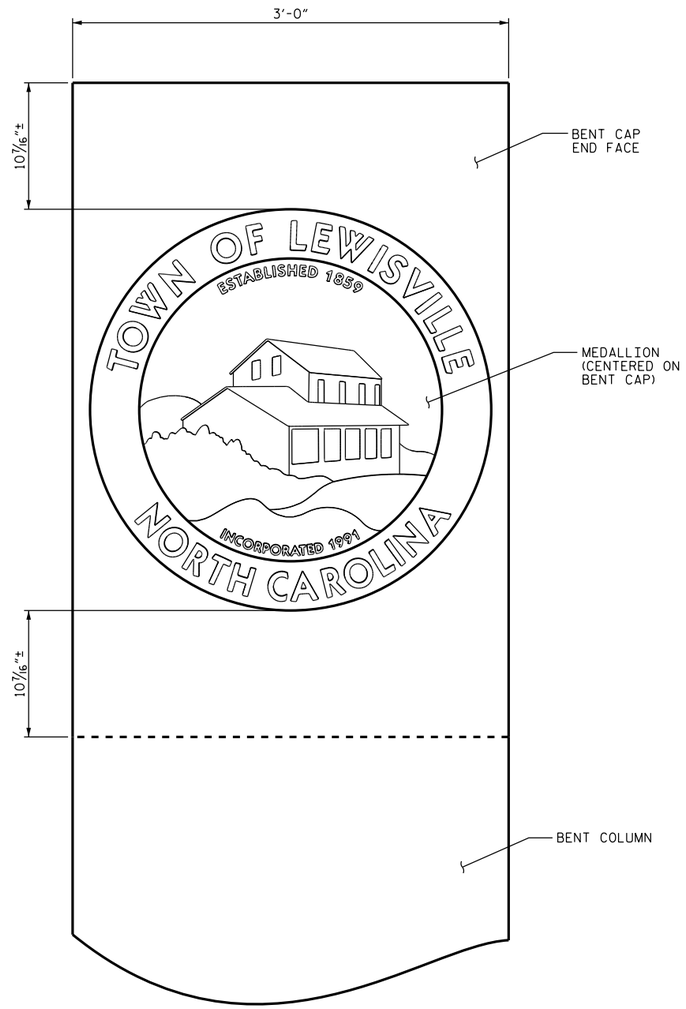

END VIEW OF CAP

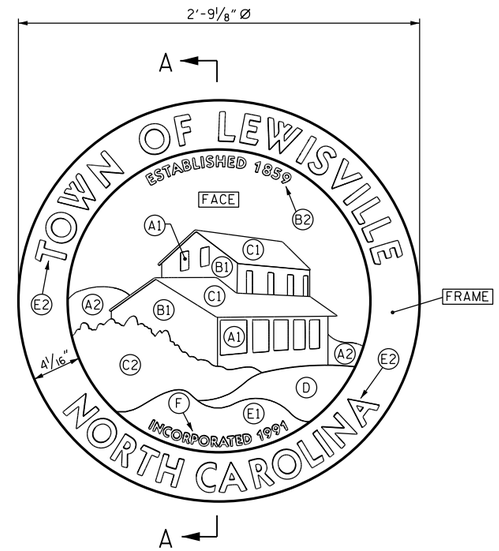

MEDALLION RELIEF

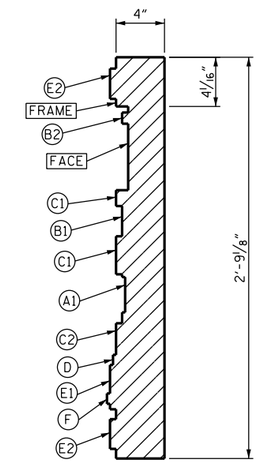

SECTION A-A

TOTAL BILL OF MATERIAL		
	NO. OF MEDALLIONS	TEXTURED COATING (SF)
END BENT 1	0	582
BENT 1	2	782
BENT 2	2	782
BENT 3	2	782
END BENT 2	0	582
TOTAL	6	3,510

SEGMENT	RELIEF HEIGHT FROM FACE	COLOR (PAGE NO.)
FACE	0"	37925 (58)
FRAME	1"	17038 (15)
A1	0.25"	17038 (15)
A2	0.25"	36495 (58)
B1	0.5"	37925 (58)
B2	0.5"	17038 (15)
C1	1"	17038 (15)
C2	1"	26270 (34)
D	1.25"	36173 (58)
E1	1.5"	36081 (59)
E2	1.5"	37925 (58)
F	2"	37925 (58)
NOTE: COLORS FEDERAL STANDARD 595B		

WBS NO. 41665.5B

FORSYTH COUNTY

BRIDGE NO. 187

SHEET 1 OF 2

DocuSigned by:
Brandon Green
2C7028B6BB...

NORTH CAROLINA PROFESSIONAL SEAL 037403 ENGINEER BRANDON L. GREEN

3/15/2017

STATE OF NORTH CAROLINA
DEPARTMENT OF TRANSPORTATION
RALEIGH

DECORATIVE PANEL DETAILS

REVISIONS						SHEET NO.
NO.	BY:	DATE:	NO.	BY:	DATE:	
1			3			TOTAL SHEETS
2			4			

DRAWN BY : B. L. GREEN DATE : 10/24/16
CHECKED BY : - DATE : -
DESIGN ENGINEER OF RECORD: - DATE : -

09-MAR-2017 09:14
S:\DEV\Squad_D\bgreen\Forsyth187\FORSYTH187.dgn
bgreen

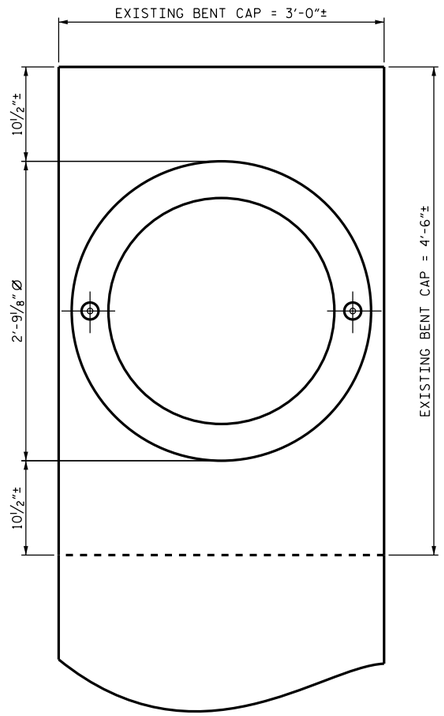

END VIEW OF CAP

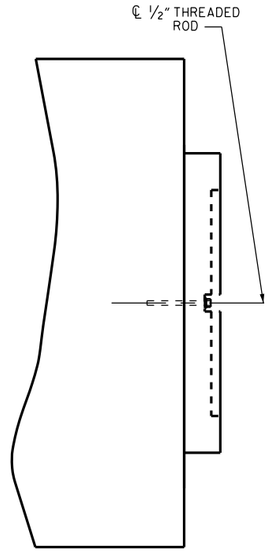

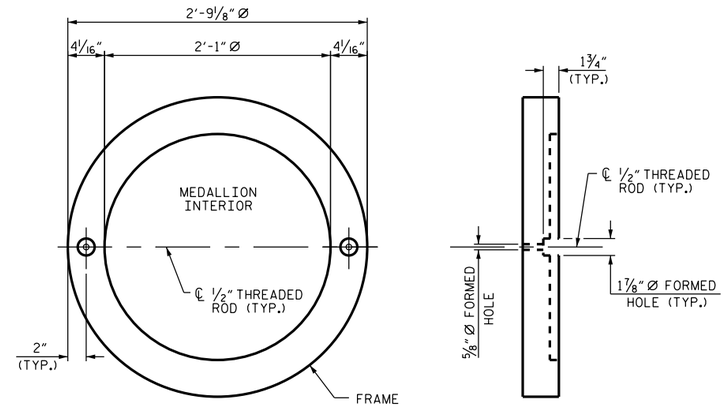

PANEL DIMENSIONS

NOTES

ADJUST DIMENSIONS AS NECESSARY TO CENTER PANEL ON END OF CAP.

USE CLASS "A" CONCRETE WITH PEA GRAVEL AGGREGATE IN THE DECORATIVE PANELS. IN ADDITION TO THE #3 REINFORCING BARS, CONCRETE TO BE REINFORCED WITH POLYPROPLYENE FIBERS PER THE MANUFACTURERS' RECOMMENDATIONS.

PREFORMED BEARING PAD SHALL CONFORM TO SECTION 1079-1 STANDARD SPECIFICATIONS. AT THE CONTRACTOR'S OPTION, AN UNREINFORCED PLAIN ELASTOMERIC PAD MAY BE USED.

REFER TO ARCHITECTURAL DRAWINGS/VISUALIZATION FOR ADDITIONAL STAIN DETAILS AND COLOR PALATE REQUIREMENTS ON THE BRIDGE.

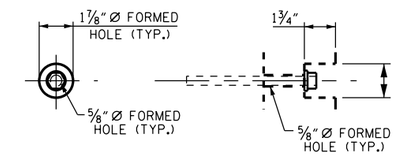

RECESS DETAILS

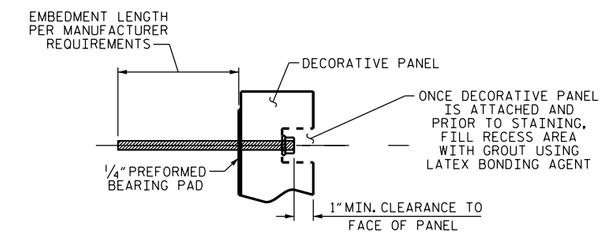

ADHESIVELY ANCHORED STAINLESS STEEL A276 TYPE 304 - ½" Ø THREADED ROD

(TESTING OF ADHESIVE ANCHOR NOT REQUIRED)

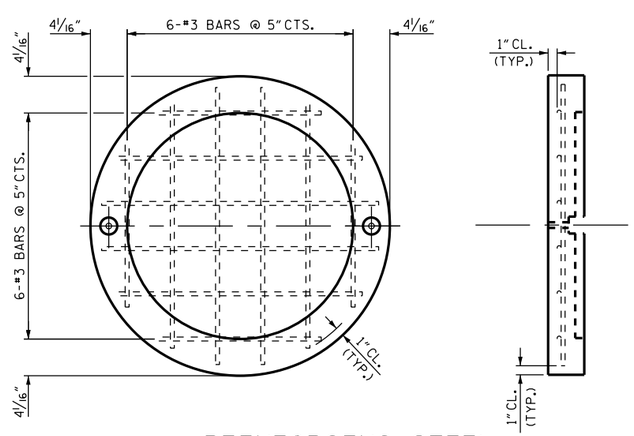

REINFORCING STEEL

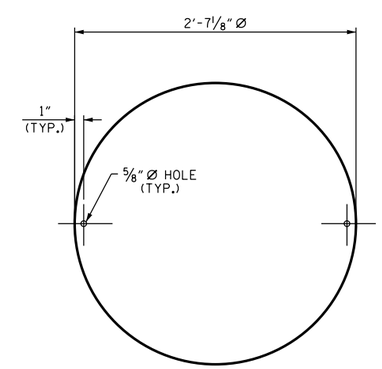

¼" PREFORMED BEARING PAD

WBS NO. 41665.5B

FORSYTH COUNTY

BRIDGE NO. 187

SHEET 2 OF 2

STATE OF NORTH CAROLINA
DEPARTMENT OF TRANSPORTATION
RALEIGH

DECORATIVE PANEL DETAILS

DocuSigned by: Brandon Green
2C7028B6...

NORTH CAROLINA PROFESSIONAL SEAL 037403 ENGINEER BRANDON L. GREEN

3/15/2017

REVISIONS						SHEET NO.
NO.	BY:	DATE:	NO.	BY:	DATE:	TOTAL SHEETS
1			3			
2			4			

DRAWN BY : B. L. GREEN DATE : 10/24/16
CHECKED BY : DATE :

09-MAR-2017 09:04
S:\DEV\Squad.D\bgreen\Forsyth187\FORSYTH187.dgn
bgreen

NCBDS